VECTORWORKS EDUCATIONAL VERSION

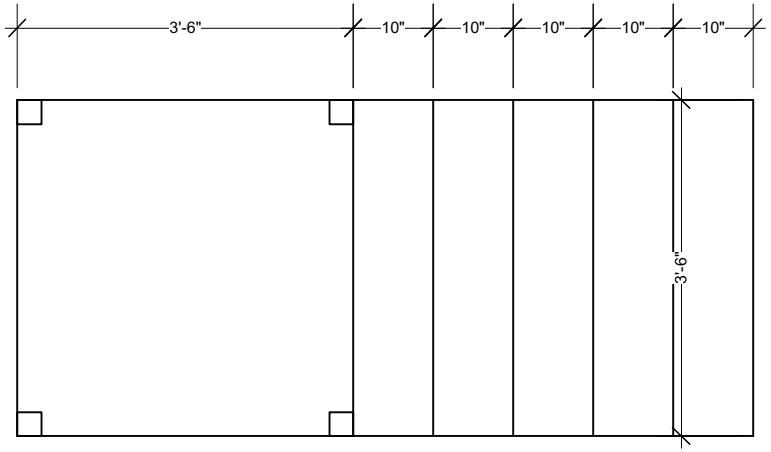

TOP VIEW

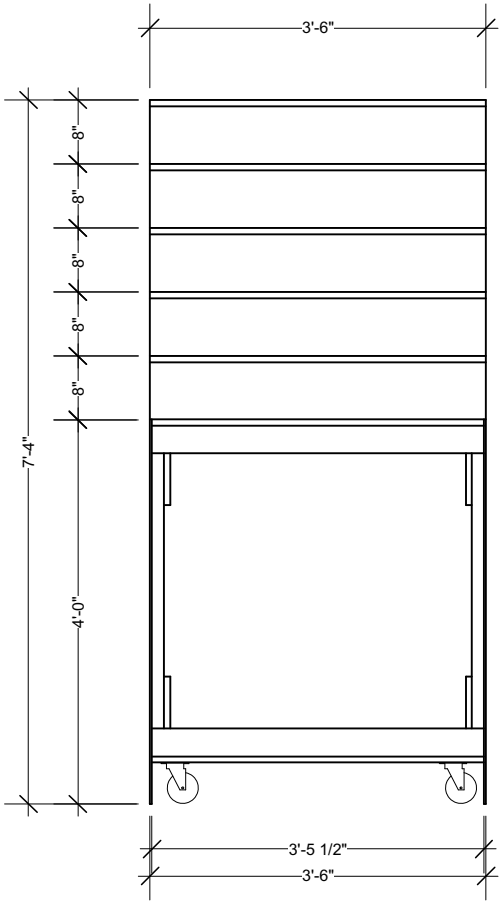

LEFT SIDE VIEW
1/4" LAUAN FACING REMOVED

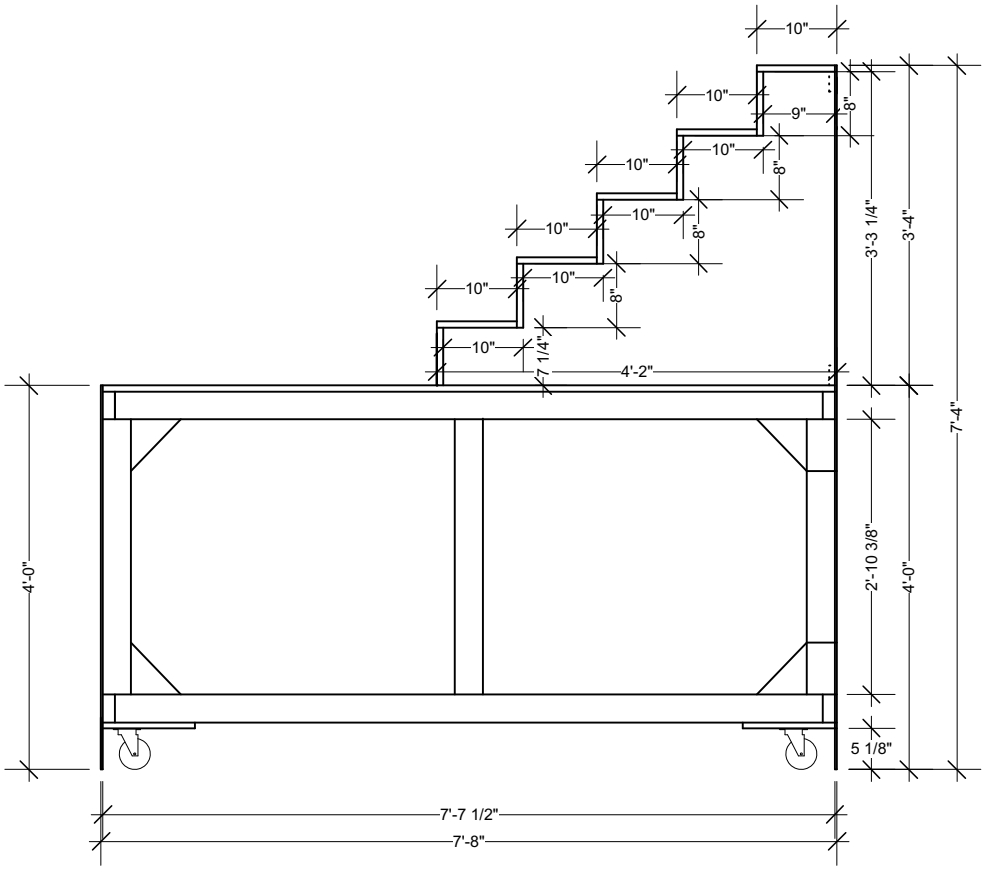

FRONT VIEW
1/4" LAUAN FACING REMOVED

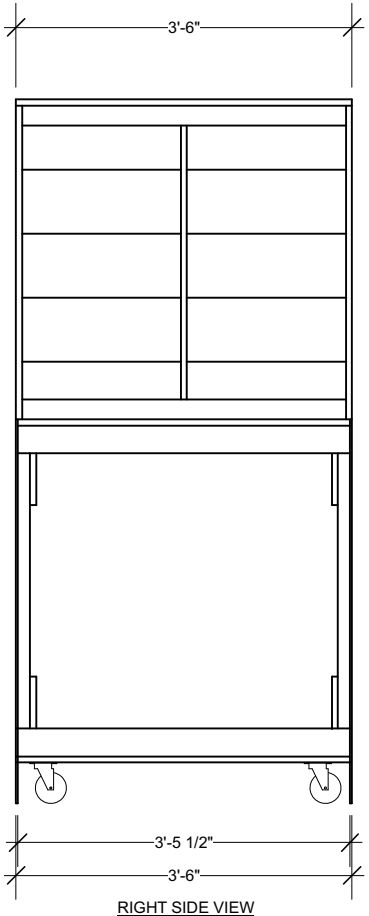

RIGHT SIDE VIEW
1/4" LAUAN FACING REMOVED

VECTORWORKS EDUCATIONAL VERSION